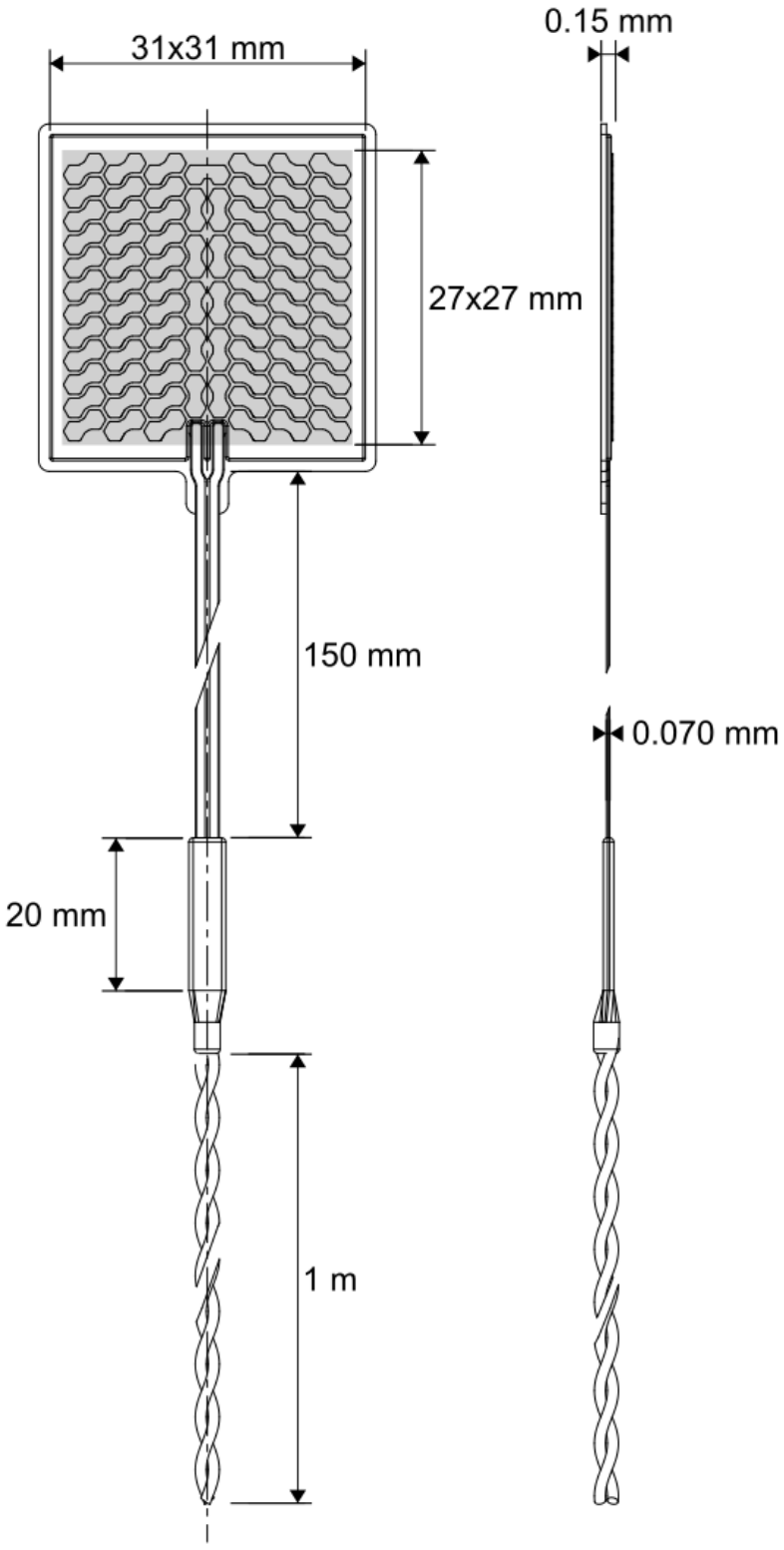
varmo_HFS27x27 specifications	
Sensor type	**Thermoelectric (thermopiles)**
Substrate	**Anodized aluminum**
Sensor thickness (µm)	**150**
Total dimension (w x b) (mm x mm)	**31 x 31**
Sensing dimension (w x b) (mm x mm)	**27 x 27**
Number of thermocouples (-)	**83**
Sensor resistance (Ω)	**800 – 900**
Thermal conductivity (W/m*K)	**0.253**
Sensitivity S (µV/W/m²) at 25 °C	**1.094**
Noise equivalent power NEP (W/(m²*sqrt(Hz))	**2.71828e-09**
Detectivity D ((m³*sqrt(Hz))/W)	**9.9327**
Maximum operating temperature (°C)	**150**
Response time (s)	**< 0.5**

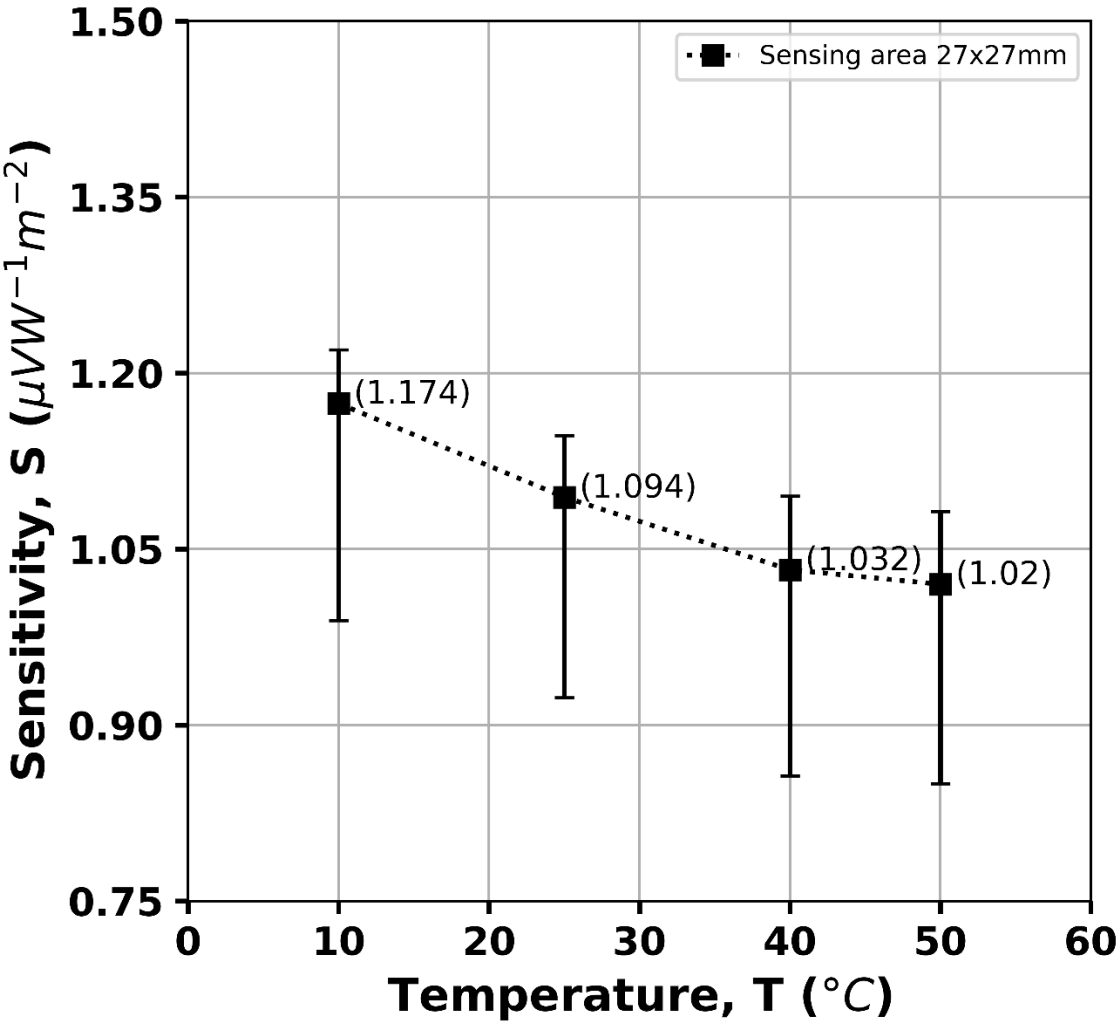
Dr. Martin Gutfleisch
Co-founder & COO
Functional Printing & Business Development

varmo UG (haftungsbeschränkt) – Heat Flux Sensors
+49 (0)160 8720585
Alter Schlachthof 39 (A6)
76131 Karlsruhe

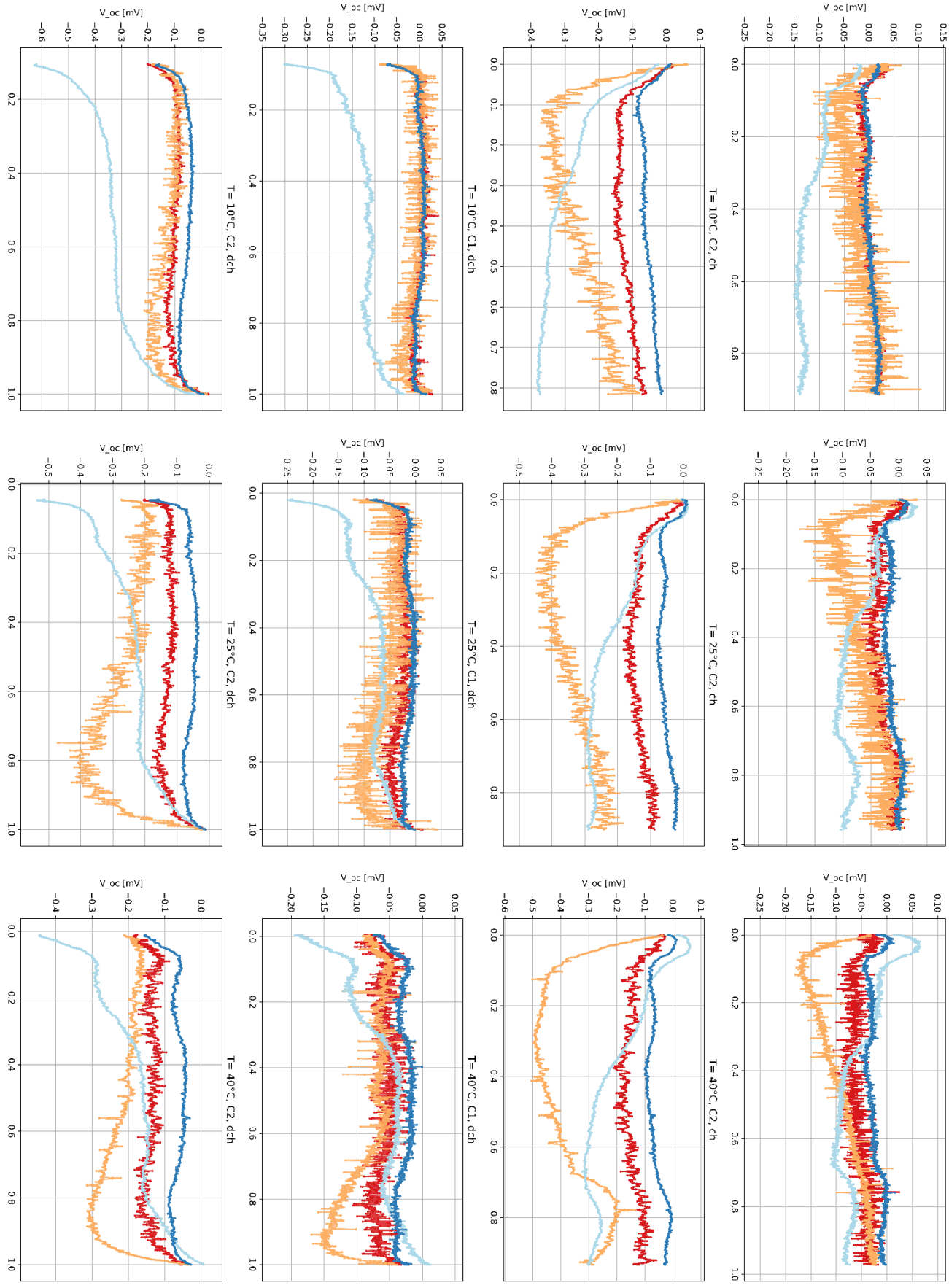




varmo UG (haftungsbeschränkt) – Heat Flux Sensors
+49 (0)160 8720585
Alter Schlachthof 39 (A6)
76131 Karlsruhe



varmo UG (haftungsbeschränkt) – Heat Flux Sensors
+49 (0)160 8720585
Alter Schlachthof 39 (A6)
76131 Karlsruhe



varmo UG (haftungsbeschränkt) – Heat Flux Sensors
+49 (0)160 8720585
Alter Schlachthof 39 (A6)
76131 Karlsruhe